VECTOR P 转舌锁

本专利重型桨式闩锁提供左开、右开或适用握柄选择。锁具机构将凸轮牢固地锁在冲击座后面，并且施加在凸轮上的力越大，凸轮就越难与冲击座接合。使用固定架或四枚模压螺栓安装。防水和防尘等级达到 IP66。标准配备相似钥匙上锁的 805 锁芯。拔取钥匙：开启/闭合 提供内侧释放安全功能。这样一来，即使在上锁状态下也可以从内部打开门锁。

IP66 DIN EN 61373 Integrated PUR-gasket

材质
Adapter for cylinder (internal component): 尼龙6+30%玻纤
锁体: 尼龙6+30%玻纤
Cam: 尼龙6+30%玻纤
嵌入式螺柱: 钢，镀锌
Cylinder: 锌合金，不锈钢304盖子和防尘片
Gaskets: Polyurethane
把手: 尼龙6+30%玻纤
Manoeuver arms: 锌合金，镀锌
安装托架: 钢，镀锌
螺母: 钢，镀锌
O-ring: NBR
Striker: 钢，镀锌

相关产品
类似产品: 2-834
附件产品: 2-412
索引编号见网站 industrilas.com

TESTS & STANDARDS
The tightening torque of the two nuts for the mounting bracket is 3,0 Nm. The tightening torque of the four nuts for the mould-in bolts is 2,2 Nm. It is important that the four holes made in the cut out for the mould-in bolts are within tolerance, to avoid damage when tightening the M5 nuts.

标准: IP66, DIN EN 61373
钥匙信息: Supplied keys: 2, Cylinder with other key codes on request

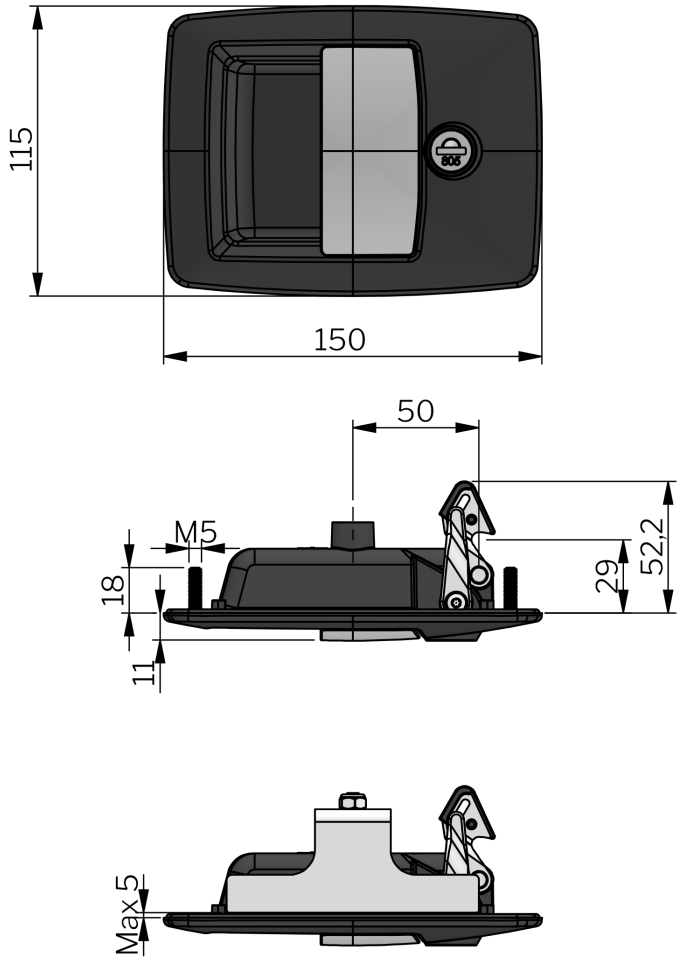

Industrilas
When access counts

每一栏选择对应的数字创建产品编号 (AAAA-BBCDDE-FFGG)

AAAA	款式	BB	把手	材质	C	Mounting	DD	Cam	E	款式	FF	Cylinder type	GG	Striker	H	L
2800	VECTOR - Paddle	00	Universal	PA6	1	Mould-in bolts	02	Fixed cam to prevent inside opening	0	Standard	01	805	01	是	16	55
		01	Universal	锌合金，镀铬	2	安装托架	03	Cam with inside safety release			02	455	00	否	-	-
		02	Universal	Zinc die cast, black							03	不同钥匙				
		10	Left	PA6							06	CH751				
		20	Right	PA6							69	Keyed alike 810				
											70	Keyed alike 815				
											71	Keyed alike 820				
											72	Keyed alike 825				
											73	Keyed alike 830				
											74	Keyed alike 835				
											75	Keyed alike 840				
											76	Keyed alike 845				
											77	Keyed alike 850				

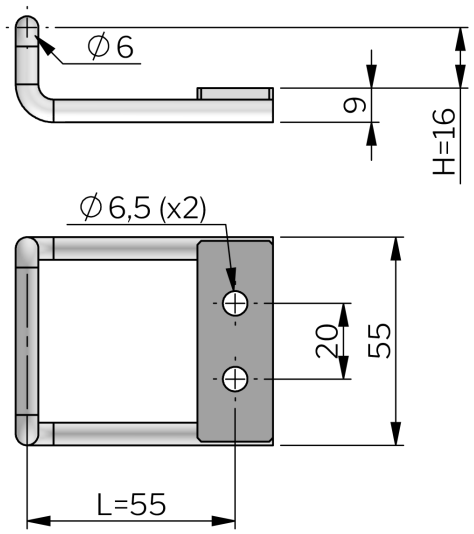
∅6
9
H=16
∅6,5 (x2)
20
55
L=55

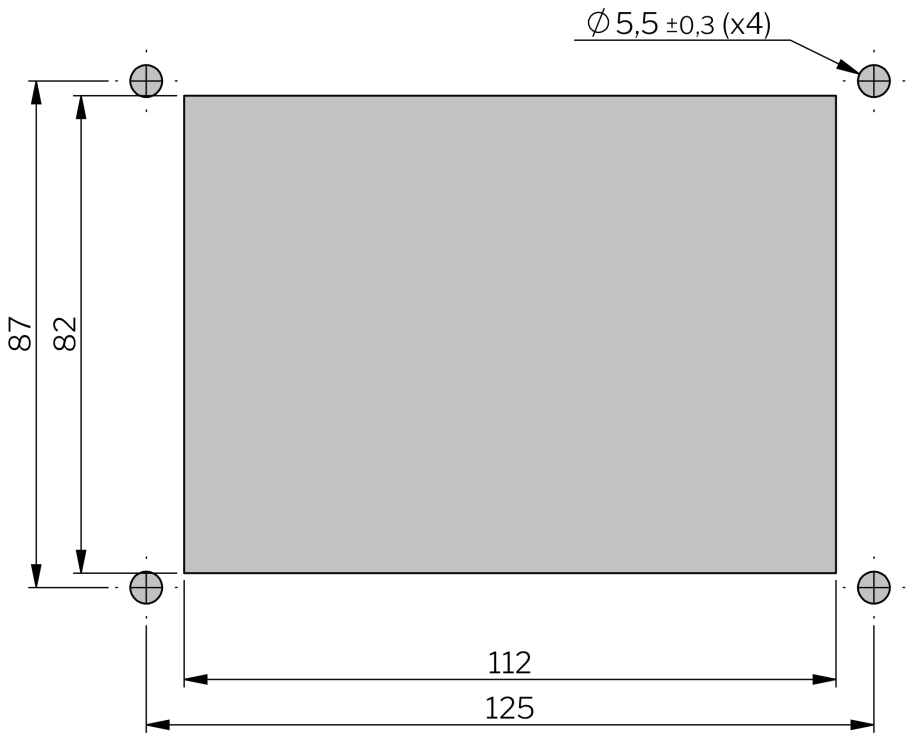
∅5,5 ±0,3 (x4)
87
82
112
125